B941 Cyclops -bot enclosure carrier DFM _V1

Operations Engineering - Mac Products - Apple Confidential

Project Overview

Overview:

- Apple Program Number: B941
- Part/Process Name: Station Name.
- Component/Part Number: Component Relative.
- DFM Project Code Name Version
    - DFM Name: Station Name + DFM.
    - Version: Ver. 1
    - Date Published: Oct. 30th 2025
- Vendor Information:
    - Vendor Name: delta.
    - Vendor DRI: haidong,dou.
- CM Information:
    - CM: Flex.
    - CM DRI: sam.

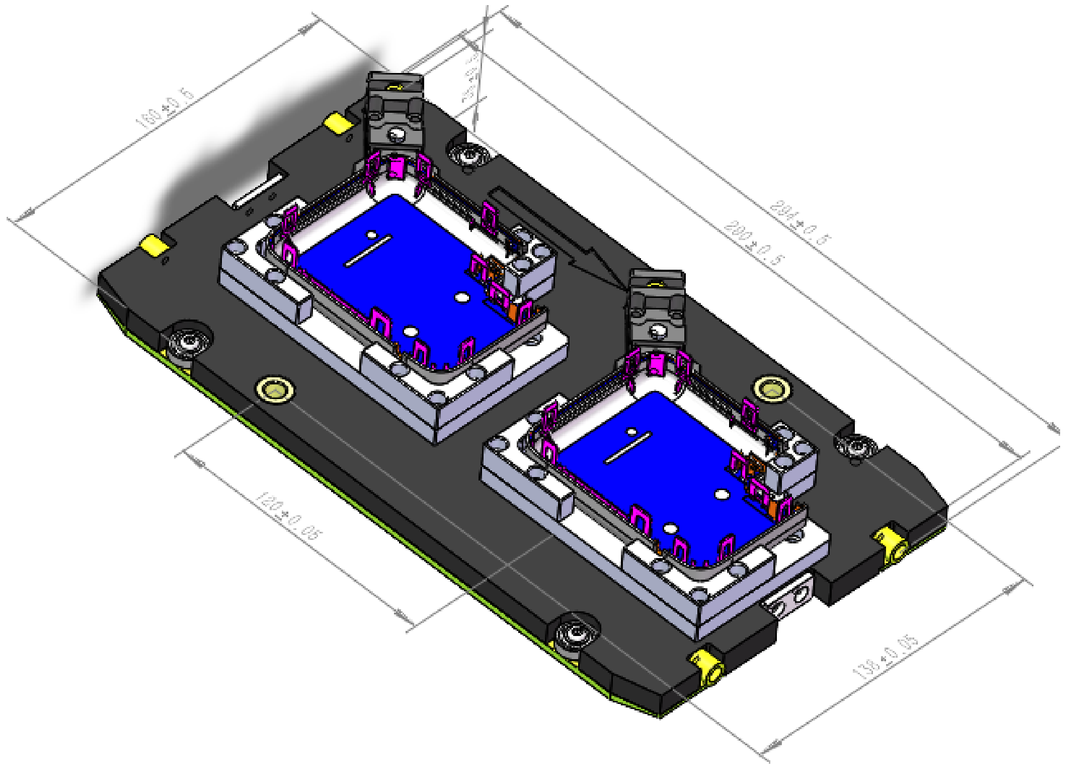

Revision Control

DFM Revision	Apple Drawing Revision	Apple 3D CAD Revision	Date	Description	Change Requested By
V1		Flex-2025_09_19_613-37920-01_1-top enclosure	2025/10/30		
V2			2025/11/7		

Table of Contents

1. Title --P1
2. Project Overview--P2
3. Revision Contro--P3
4. Table of Content--P4
5. Apple Drawing Used for Automation Dev. – P5
6. Detailed Design for Automation –P6~P9
7. Tolerance Analysis / Engineering Analysis –P10
8. Schedule. –P11
9. Bill of Materials. –P12
10. DFM Approval SOP—P13

Apple Drawing Used for Automation Dev.

Apple Drawing Revision Used :

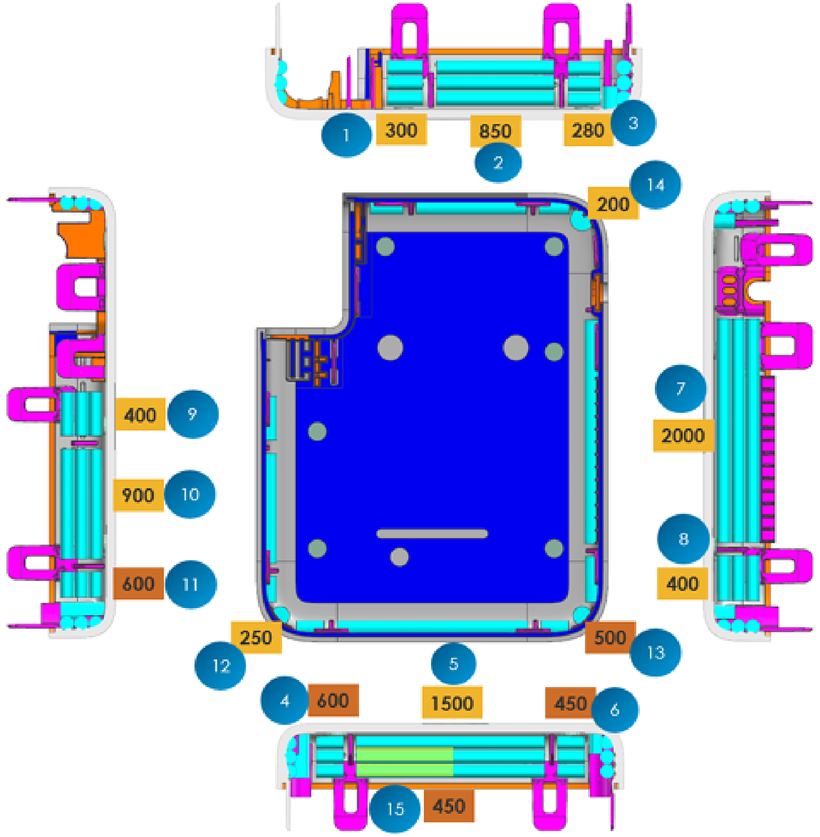

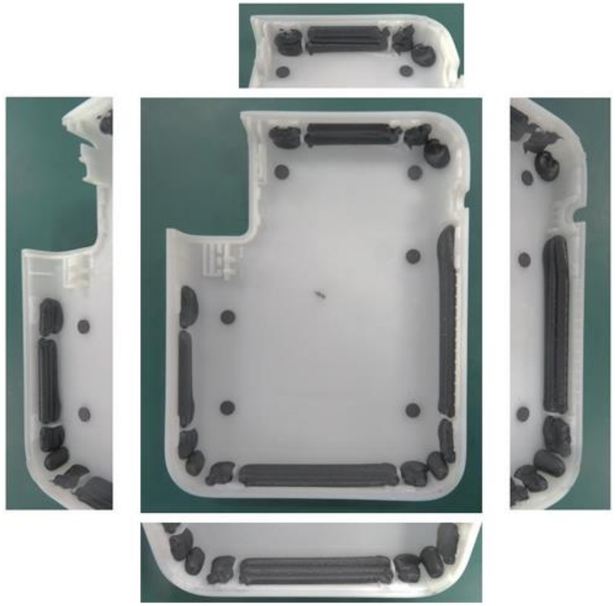

Location	Type	Nominal mass (mg)	Tolerance	Note
1	Colltech N-Sil 8114HD	300	±60	TOTAL 3 LINES
2	Colltech N-Sil 8114HD	850	±170	TOTAL 3 LINES
3	Colltech N-Sil 8114HD	280	±56	TOTAL 3 LINES
4	Colltech N-Sil 8114HD	600	±120	TOTAL 3 LINES
5	Colltech N-Sil 8114HD	1500	±300	TOTAL 3 LINES
6	Colltech N-Sil 8114HD	450	±90	TOTAL 3 LINES
7	Colltech N-Sil 8114HD	2000	±400	TOTAL 3 LINES
8	Colltech N-Sil 8114HD	400	±80	TOTAL 3 LINES
9	Colltech N-Sil 8114HD	400	±80	TOTAL 3 LINES
10	Colltech N-Sil 8114HD	900	±180	TOTAL 3 LINES
11	Colltech N-Sil 8114HD	600	±120	TOTAL 3 LINES
12	Colltech N-Sil 8114HD	250	±50	ONE LINE
13	Colltech N-Sil 8114HD	500	±100	ONE LINE
14	Colltech N-Sil 8114HD	200	±40	ONE DROP
15	Colltech N-Sil 8114HD	450	±90	TOTAL 2 LINES

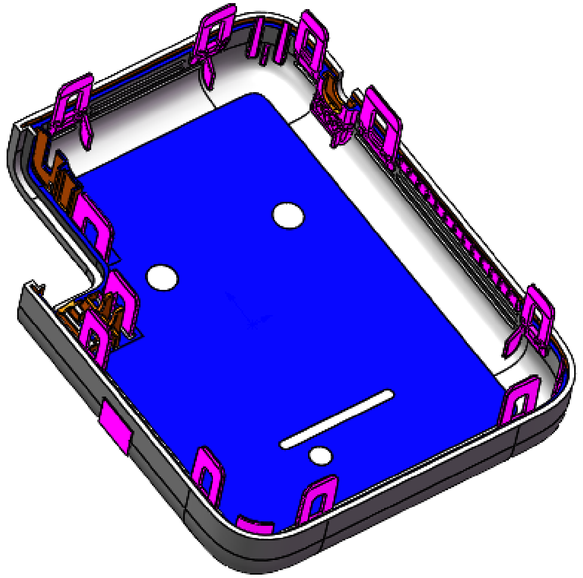

Machine Overview

Machine Overview:

Outline Dimensions:

- Long:294mm
- Width:160mm
- Height:36mm

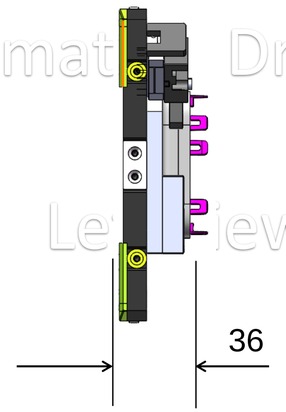

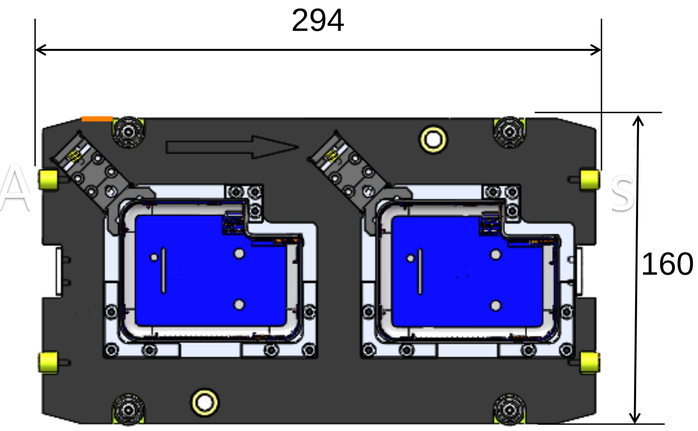

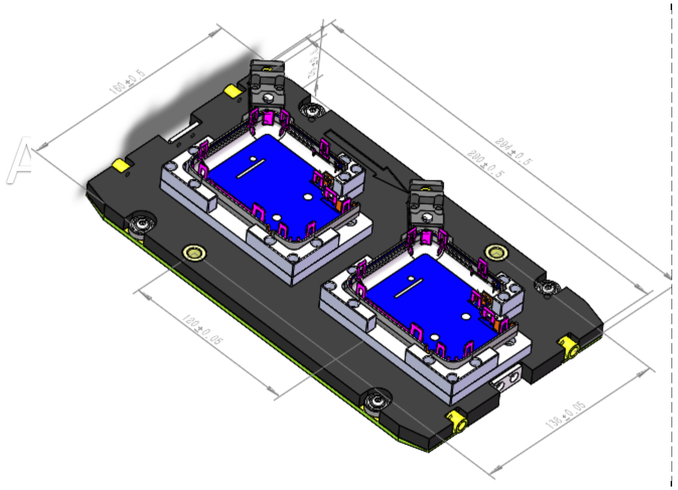

Detailed Design – bot enclosure carrier

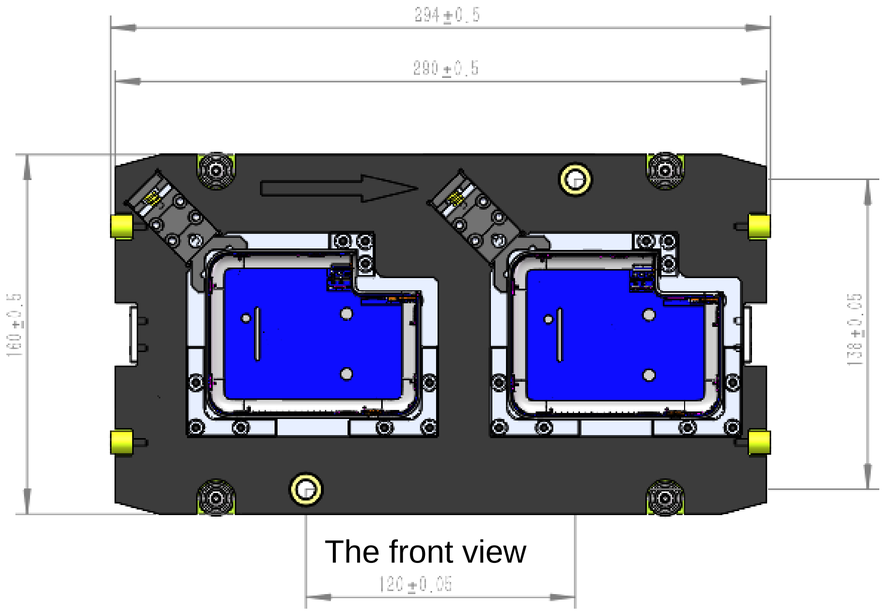

The front view

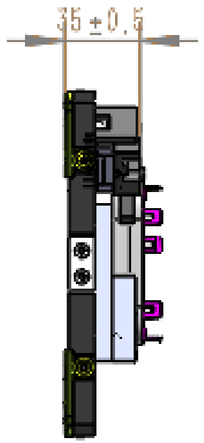

The side view

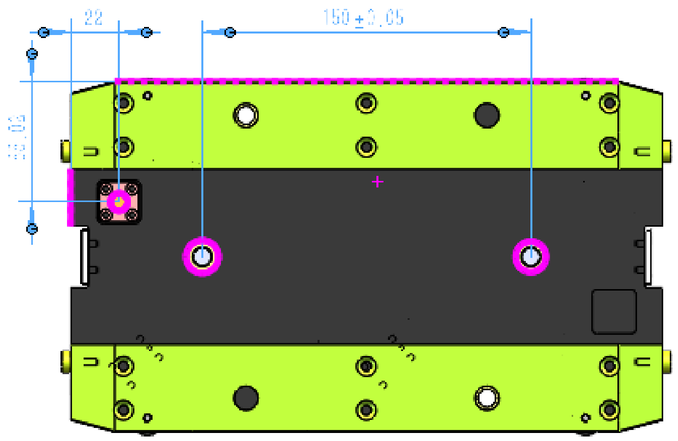

The back view

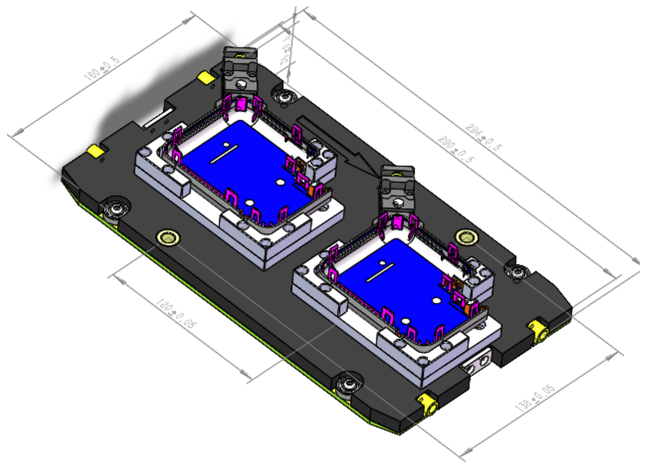

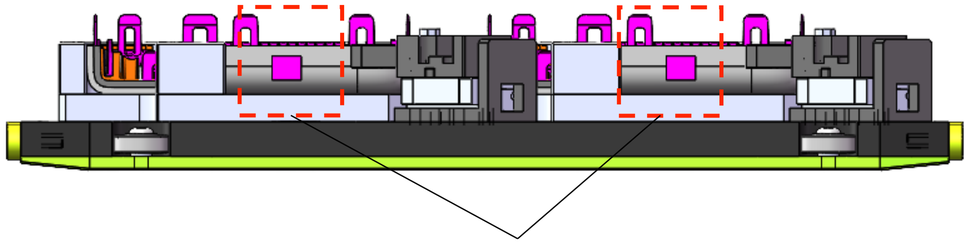

The barcode

Detailed Design - bot enclosure carrier

Item	Name	Type	Brand	Material	Spec
1	Carrier	machined parts	delta	AL6061	271mm*160mm
2	Bushing	Standard parts	misumi	S45C	Φ11mm*8mm
3	Screw	Standard parts	misumi	SUS304	
4	Bearing	Standard parts	misumi	S45C	
5	Gasket	Standard parts	misumi	S45C	
6	Slider	machined parts	delta	S45C	
7	Rfid	Standard parts	omron	NA	
8	Rfid pad block	machined parts	delta	POM(ESD)	
9	Buffer block	machined parts	delta	PU(ESD)	
10	Blocking block	machined parts	delta	SUS304	
11					
12					

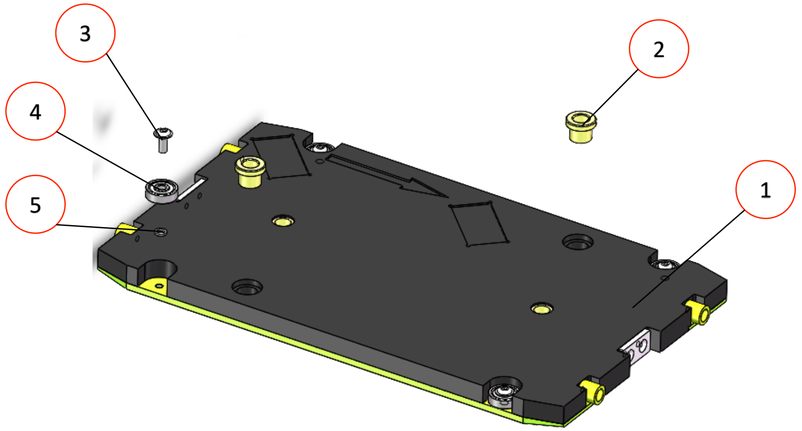

The front view

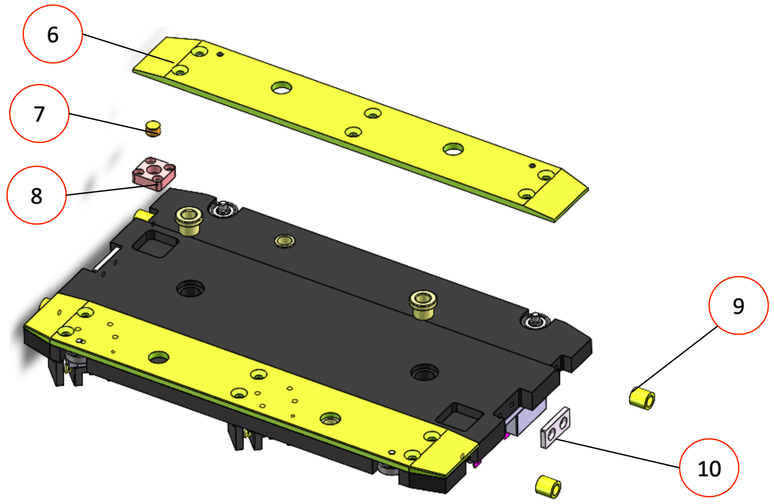

The back view

Detailed Design – bot enclosure carrier

Item	Name	Type	Brand	Material	Spec
1	Spring	Standard parts	misumi	NA	Φ6mm*10mm
2	Slide seat	machined parts	delta	AL6061	25mm*20mm
3	Hinge pin	machined parts	delta	S45C	Φ3mm*10mm
4	Spring	Standard parts	misumi	NA	Φ3mm*8mm
5	Positioning block	machined parts	delta	POM(ESD)	
6	Slide rail	Standard parts	misumi	NA	
7	Mounting base	machined parts	delta	NA	
8	Fixture	machined parts	delta	POM(ESD)	

■ Key Principle :

1. **Product Orientation** : Push the block module , ensure reach the X-Axis & Y-Axis Positioning Edge , the PCBA will be ensure loaded correct with no gap into Cavity .
2. **Support Sides** : Formed a safety supporting distance to escape the Component collision with the loading board.
3. **Positioning pin** : Cooperate work with position hole to stay within the tolerance bound among per cavity

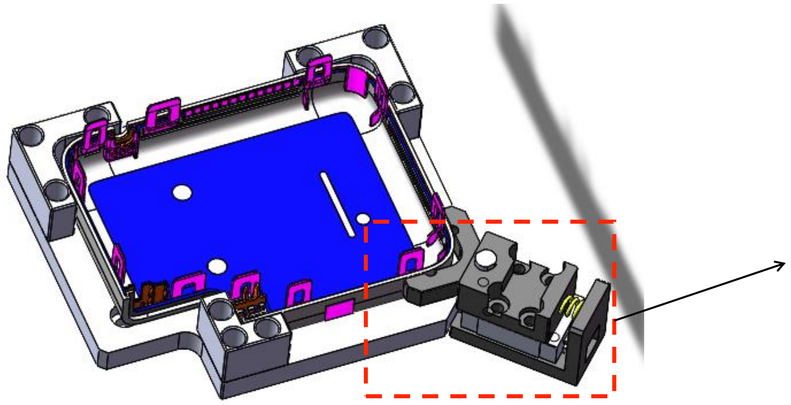

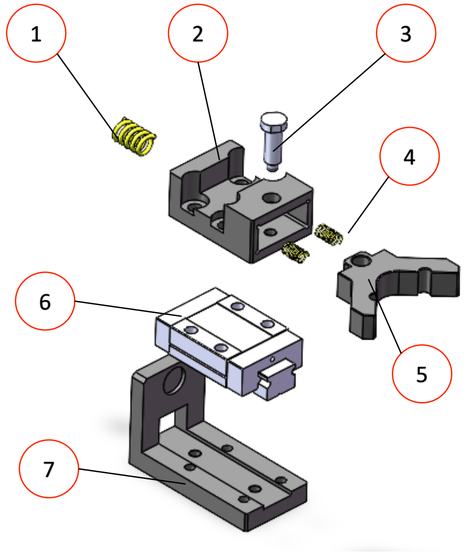

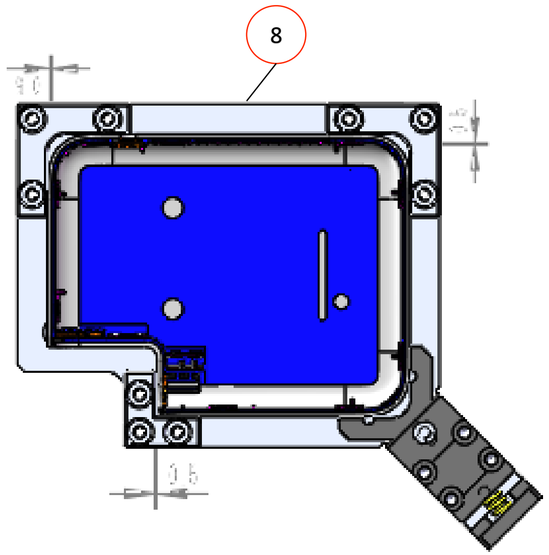

Tolerance Analysis / Engineering Analysis

-Apple template must be used.

Description	Nominal	X upper	X lower	Y upper	Y lower	Z upper	Z lower
Guide sleeve center to Cavity location hole center error		0.05	0.05	0.05	0.05	/	/
Cavity location hole center To Cavity location sidewall error		0.1	0.1	0.1	0.1	/	/
Cavity location sidewall To product sidewall error		0	0	0	0	/	/
product sidewall outline dimension error		0.1	0.1	0.1	0.1	/	/
Product height error		/	/	/	/	0.1	0.1
Cavity height error		/	/	/	/	0.05	0.05
Worst case		0.25	0.25	0.25	0.25	0.15	0.15
RSS		0.113	0.113	0.113	0.113	0.087	0.087

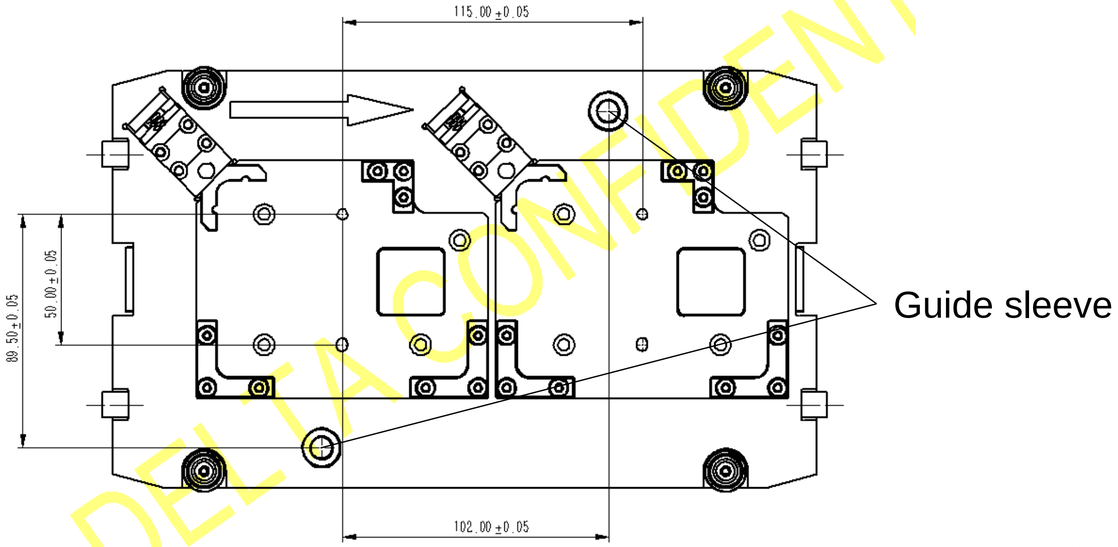

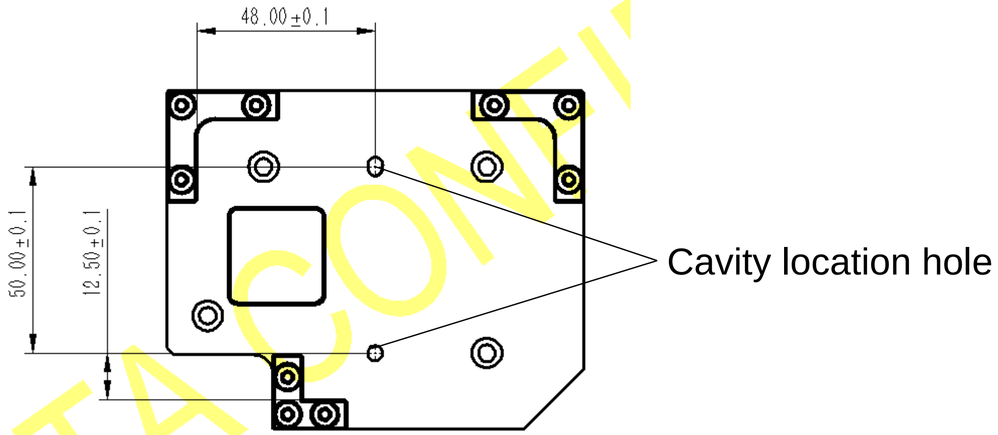

DELTA CONFIDENTIAL

Schedule

Schedule For MP Machine:

1) L/T from KO to ETA: 62days.
2) L/T from KO to HO: 82 days.

No.	Process	L/T	0	2	4	6	8	10	12	14	16	18	20	22	24	26	28	30	32	34	36	38	40	42	44	46	48	50	52	54	56	58	60	62	64	66	68	70	72	74	76	78	80	82
1	Kick off	/																																										
2	Detail Design	14																																										
3	Material Preparation	16																																										
4	Assembly	20																																										
5	Trial Run	14																																										
6	FAT	2																																										
7	ETD-ETA	4																																										
8	Setup	16																																										
9	On site debug	6																																										
10	SAT	6																																										
11	Ready to use	2																																										

Bill of Materials (BOM) for Key Parts/Consumables

Part Description	Model	Vendor	Lead time/Availability
Bushing	C-JBHM8-8	misumi	15 days
Bearing	C-E634ZZ	misumi	10 days
Rfid	V680-D1KP52MT	misumi	20days
Slide rail	MGN9C	HIWIN	15Days

DFM Approval SOP

1. Incline should be the Tool used to manage DFM approval by CM
2. DFM to be upload by the CM DRI under “DFM” Tab - this should be done after CM has reviewed and approved the DFM provided by Automation Vendors

001 - Laser Etch 01 2D SN on PCB Bottom Side

Tool	UPH	FAT	Q_Plan	SAT	DWG	DFM	CPK	FAI	COS	SOP	IQC	R&R	OQC
FLEX1	06/19	06/19	-	06/19	-	05/01	-	-	-	06/20	-	-	-

3. Apple DRIs to provide feedback on the DFM uploaded in Incline and mark as Approved/Deviated/Rejected

DFM FLEX1 001 - Laser Etch 01
2D SN on PCB Bottom Side

Rev. 3 + New File

01 HG-S01-2D Laser Etching-20180418 ... (1.6MB)
Uploaded by Sam Yao • 4/18/18
Deviated

DFM FLEX2 004-0
Auto Load for CCG3

Rev. 1 + New File

CCG3 auto loading proposal-V3.pdf (1.4MB)
Uploaded by Dindo Seguin • 4/21/18
Rejected

SAT FLEX1 026 - AI
T101 AI

Rev. 1 + New File

Simcoe Line Qual Data - Inset T101 mach... (1.2MB)
Uploaded by Kevin Chang • 7/16/18
Approved

4. Steps 2 and 3 to be repeated until DFM is marked as “Approved” by Apple DRI - Station KO allowed only post DFM approval

APPENDIX